S41-4058TTN

4”x 4-1/4”x 5/8”x SQ CORNERS HINGE
FOR FIBER GLASS DOORS / NRP / STEEL

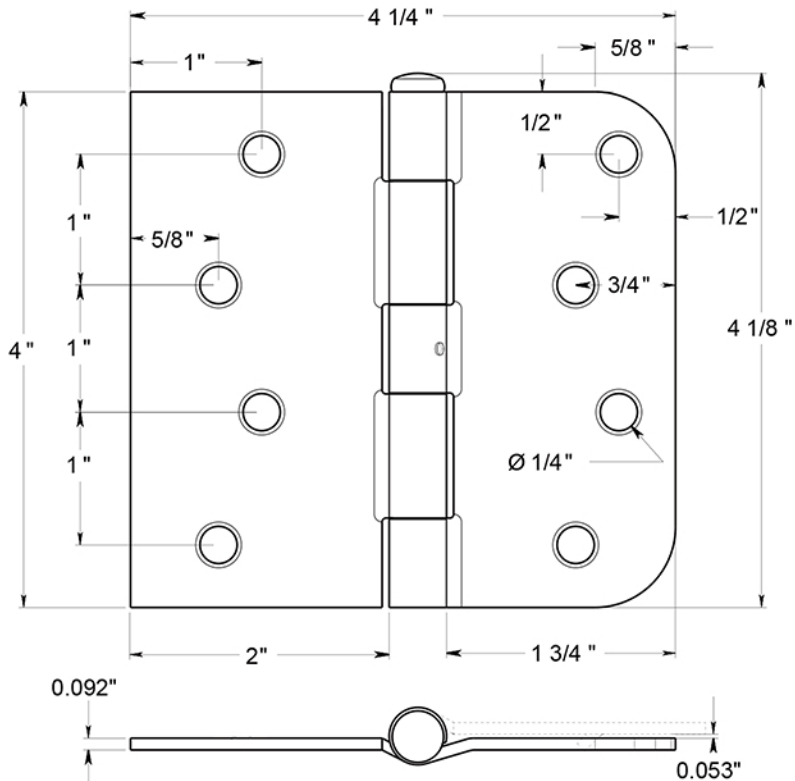

DRAWING NOT TO SCALE	NOTE: Deltana reserves the right to constantly improve its products and is not responsible for differences between the product in-hand and the specifications contained in this drawing. We do not recommend to pre-drill holes or pre-cut woods or metals based on the drawing information if the veracity of the specifications has not been proven by the live product.