NEREA PLUS - FV181.01/59V

Short vessel height, single handle lavatory set, knurled handle vertical style, with push-down pop-up drain assembly (no lift rod).

Monocomando para lavatorios vessel bajos con volante moletado estilo vertical y desagüe “push down” .

FRANZ VIEGENER

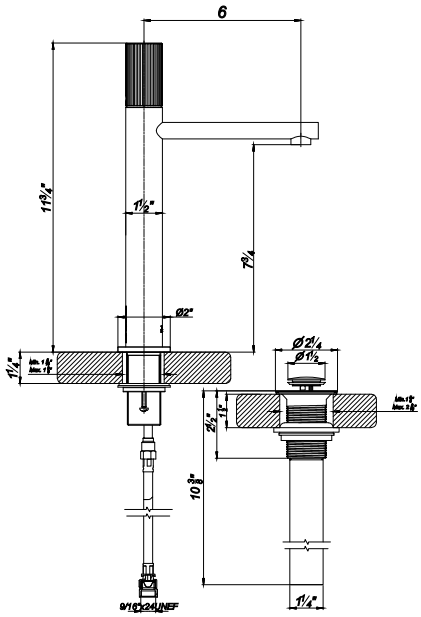

FEATURES
CARACTERÍSTICAS

- All brass construction.
  Producto realizado íntegramente en latón.
- Brass valve bodies.
  Cuerpos de válvulas fabricados en latón.
- Stationary spout with recessed aerator device.
  Pico con aireador oculto.
- Flexible SS connectors with sediment screens.
  Flexibles con conectores SS y filtro de sedimento.

COLOR / FINISHES
COLOR / ACABADOS

- PC *Polished Chrome.*
- PN *Polished Nickel.*
- BN *Brushed Nickel.*
- BG *Brushed Gold.*
- PG *Polished Gold.*
- RG *Rose Gold.*
- BK *Black Chrome.*
- FB *Flat Black.*
- UPB *Unlackered Polished Brass*

FLOW RATE
CAUDAL

- Maximum flow rate 1,2 gpm (4,5 l/min).
  Caudal máximo 1,2 gpm (4,5 l/min).

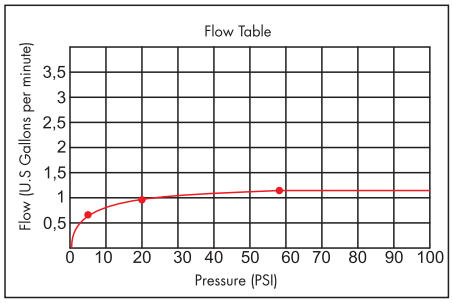

ITEM DETAILS
DETALLE DE PRODUCTO

COMPLIANCE
CERTIFICACIONES

LEAD FREE NSF / ANSI 61 UPC C ®

WaterSense Meets EPA Criteria Certified by IAPMO R&T

STATE OF CALIFORNIA ENERGY COMMISSION