HUNTINGTON BRASS

SPECIFICATION / BREAK DOWN

P6120001, P6120002 - Trend Shower Only Trim

Description

- Shower only trim kit
- "Trend" metal lever handle
- 1 setting shower head
- 1.5 GPM ASME Compliant
- VALVE SOLD SEPARATELY

Standards

- Complies with IAPMO UPC/cUPC
- ADA Accessibility Guidelines for Buildings and Facilities - 4.27.4 Controls and Mechanisms
- CALGreen compliant
- EPA WaterSense Certified by IAPMO R&T
- California Energy Commission Listed

Colors / Finishes

P6120001 - Chrome
P6120002 - PVD Satin Nickel

P6120001

BREAK DOWN

Component Parts List

NO.	Part No	Qty
01	CTCT0043	1
02	CTPB0470	1
03	ATBE0085	1
04	CTHZ0330	1
05	CCQT0002	1
06	CTST4101	1
07	CTCB0185	1
08	CTCT0053	1
09	CTST0230	2
10	CTCT0052	1
11	CTWP0223	1
12	CTWP0192	1

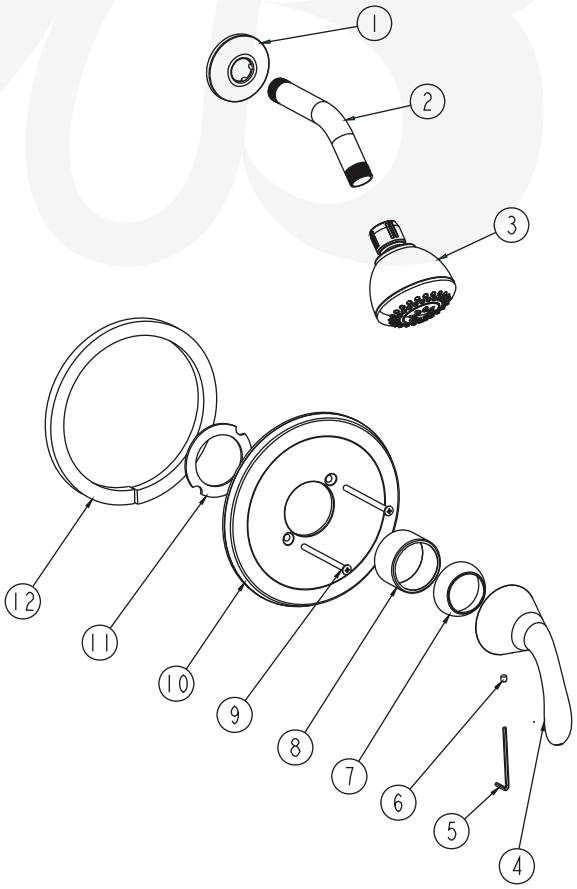

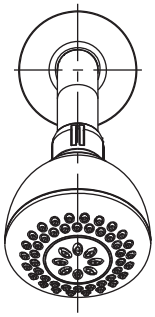

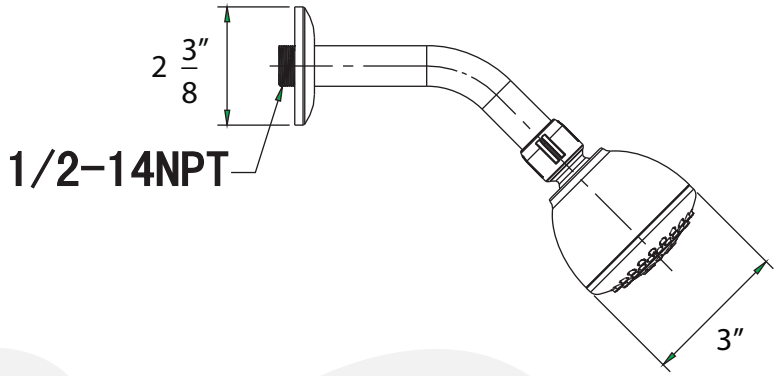

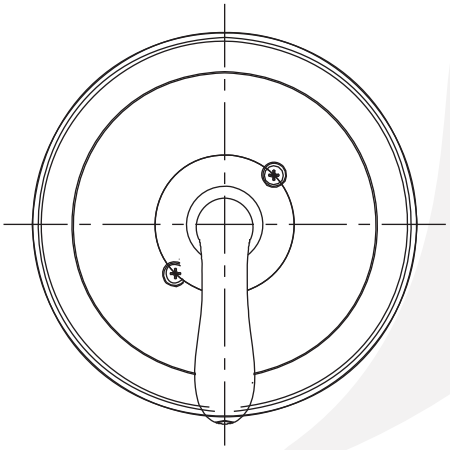

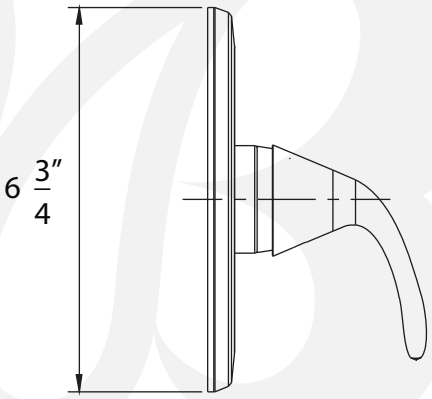

Item Number	Type	Date
P6120001, P6120002	Shower	3/17/2016