134.0275.324

FAMILY : **Waste Management** | SERIES : **Waste disposers** | MODEL : **KWD75B1-EZ**

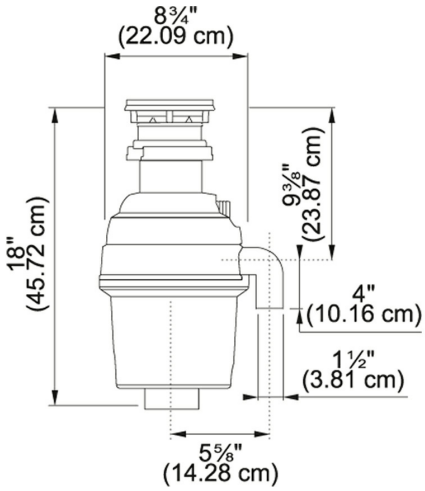

TECHNICAL DATA	
Voltage	110
Horse Power Waste Disposer	3/4 HP